AIRCRAFT MODEL	SYSTEM CONFIGURATION	EXTERNAL LOAD PROVISION INST'N PART NUMBER	WEIGHT (REF)	CTR-of-GRAV. (REF)	LOAD BEAM INSTALLATION PART NUMBER	WEIGHT (REF)	LOAD BEAM C.G MISSION DEFINED (REF)
CESSNA 208B	C208ELP-100-1 APPLICABLE ONLY TO A/C S/N's 208B0365, 0406, 1277, 1299	C208ELP-110-1/-2	45 LBS	F.S. 236	C208ELP-112-1 (Alt: C208ELP-112-2)	31 LBS (15 LBS)	FS137-183, FS241-329
	C208ELP-100-2	C208ELP-110-3/-2	41 LBS	F.S. 247	C208ELP-112-1 (Alt: C208ELP-112-2)	31 LBS (15 LBS)	FS147-183, FS241-329

SHEET	REV	ECO	DATE	DESCRIPTION	BY	APR	CHK
1-3	A		04/29/2009	REMOVED 208 FROM MODELS. ADDED SHTS 2-3.		REB	LS
1-3	B		10/08/2010	UPDATED DETAIL A TO SHOW SUPPORT BRACKET. CRCT'N 45 LBS WAS 39 LBS. ADDED -2 CONFIG & ALT. -112-2. SHE CRCT'N "LOADING LIMITATIONS..." WAS "-1 CONFIG LIMITATIONS". REMOVED REF FIGS 1-4 FROM SHT2. DEFINED FIGS 2,4 (SH3) APP'L -1 ONLY. TABLE 1 & 2 CRCT'N 19.6 in WAS INDICATED 18.6 in.	REB	REB	LS
				DEFINED -1 INSTN NOT AVAILABLE FOR NEW INSTN, ADDED LOAD WIDTH LIMITATION, LOAD BEAM NUMBER LIMIT	REB	REB	LS
			11/05/2010	DEFINED NOTES 1, 2, 3, 4	REB	REB	LS

INSTALLATION LIMITATIONS

1. ONE LOAD BEAM ALLOWED PER EXTERNAL LOAD RAIL KIT INSTALLATION
2. ATTACHED LOAD MOUNT SURFACE MUST CONTACT ENTIRE MOUNT BLOCK SIRFACE.
3. LOAD MOUNT BOLTS MUST BE AN4 OR EQUIV.; TORQUE MOUNTING BOLTS 50-70 IN.-LB.
4. AIRCRAFT, AS LOADED, MUST MEET CERTIFICATED WEIGHT AND BALANCE LIMITATIONS.

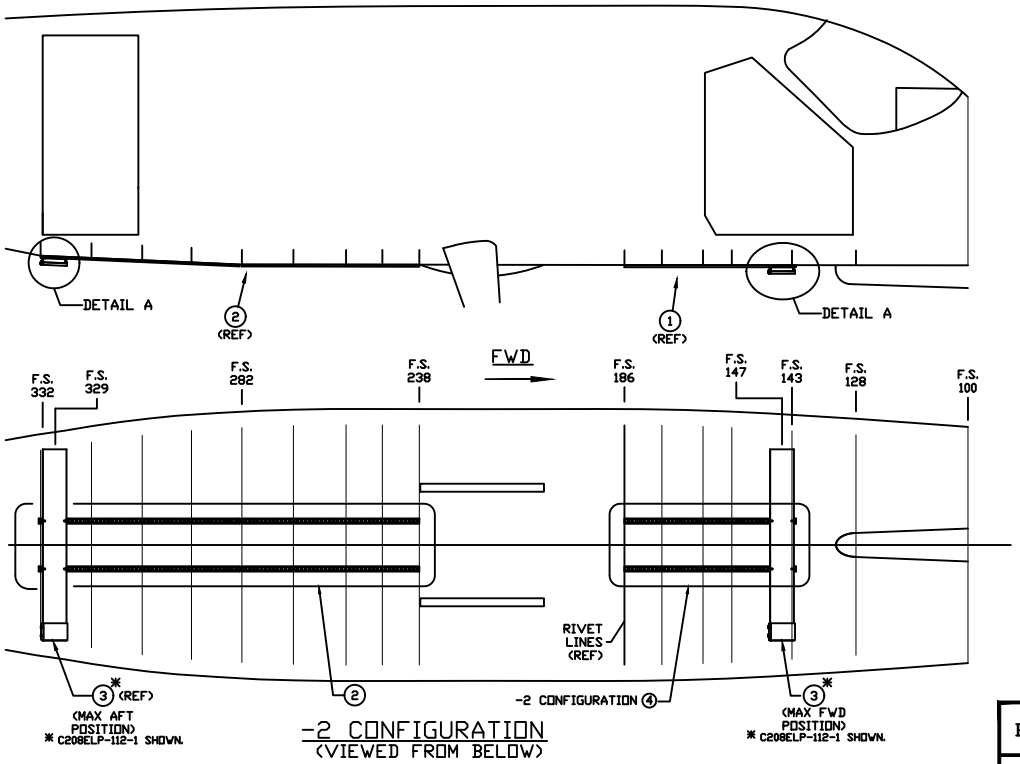

-2 CONFIGURATION
(VIEWED FROM BELOW)

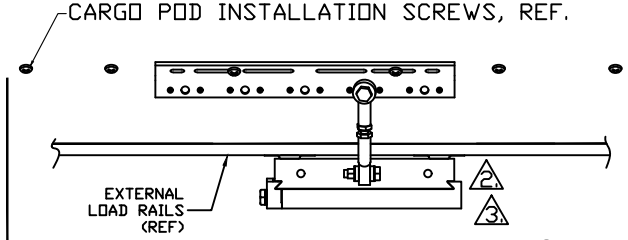

SUPPORT BRACKET INSTN, DETAIL A 3 (REF)

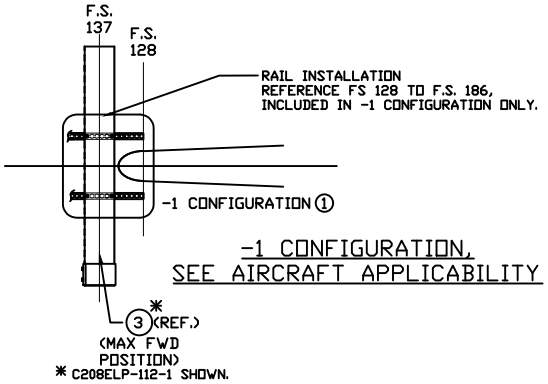

-1 CONFIGURATION,
SEE AIRCRAFT APPLICABILITY

-CONFIDENTIAL INFORMATION-
THE INFORMATION AND DATA CONTAINED HEREIN IS PROPRIETARY AND IS SUBMITTED IN CONFIDENCE; AND SHALL NOT BE DISCLOSED, USED OR DUPLICATED FOR ANY PURPOSE WHATSOEVER WITHOUT THE PRIOR WRITTEN PERMISSION OF PARAVION TECHNOLOGY, INC.

Paravion® Technology Inc.

DIMENSIONS IN INCHES
TOLERANCES EXCEPT WHERE NOTED:
.X = ± .1
.XX = ± .05
.XXX = ± .010
ANGLES = ± 1°
THREADS:
INTERNAL=CLASS 2B
EXTERNAL=CLASS 2A

TITLE: EXTERNAL LOAD PROVISIONS CONFIGURATION

DRAWING NO. C208ELP-100
SEE BILL-OF-MATERIALS DOCUMENT

DRAWN BY	APRVD. BY	CHK'D BY	DATE	REV	ECO
BNS	REB	LS	12/30/2010	B	

DO NOT SCALE DRAWING

© 2010 PARAVION TECH., INC.
PARAVION IS A TRADEMARK OF PARAVION TECHNOLOGY, INC.

PROTO 1

SHEET 1 OF 3

LOADING LIMITATIONS

EXTERNAL LOAD PROVISIONS

SHADED AREAS SHOWN BELOW INDICATE THE MAXIMUM ALLOWABLE HEIGHT OF A LOAD AT GIVEN FUSELAGE STATIONS.

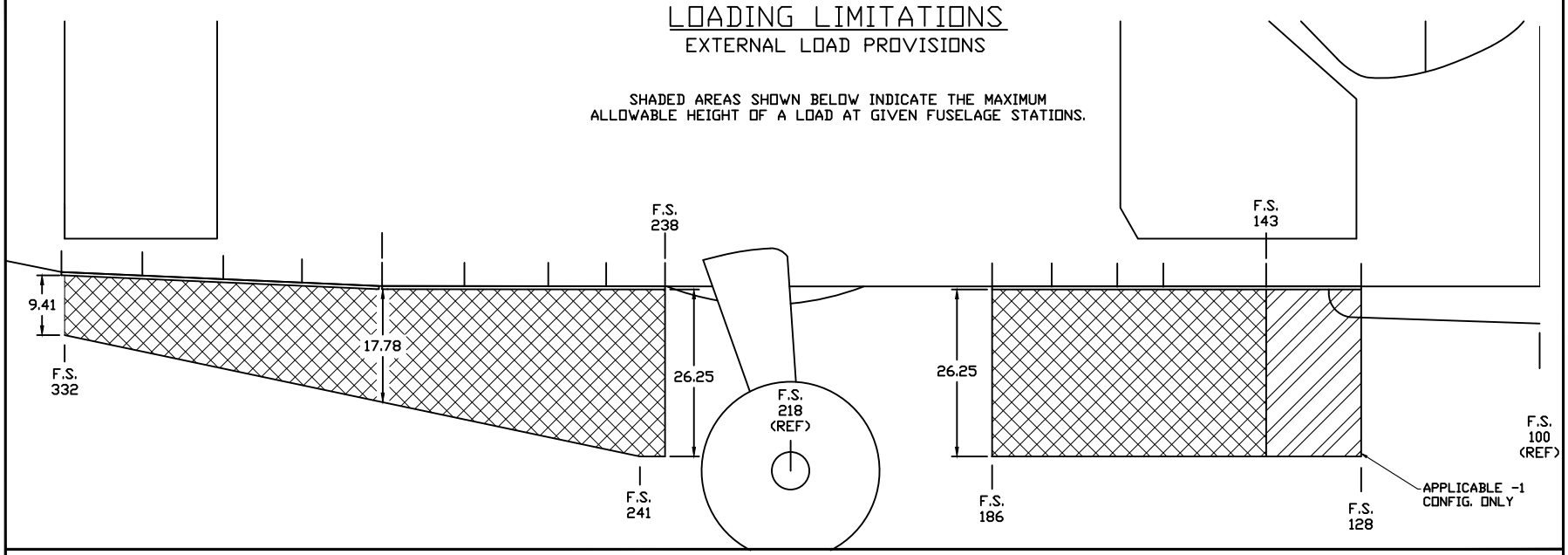

FUSELAGE STATION (in)	Y max (in)
128 - 186	26.3
238 - 241	26.3
250	24.5
260	22.4
270	20.3
280	18.2
290	16.4
300	14.7
310	13.1
320	11.4
332	9.4

F.S. 282

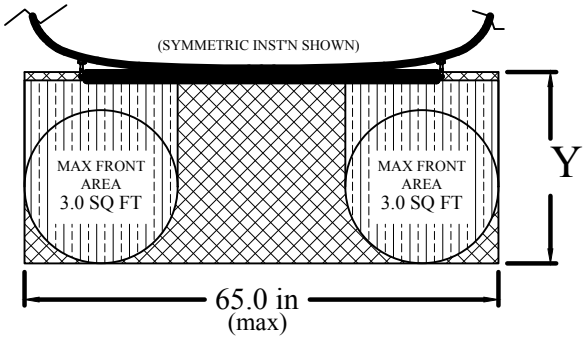

-1/-2 CONFIGURATIONS (CON'T)

LIMITATIONS

Paravion® Technology Inc.	TITLE: EXTERNAL LOAD PROVISIONS CONFIGURATION				DRAWING NO. C208ELP-100 SEE BILL-OF MATERIALS DOCUMENT	
DIMENSIONS IN INCHES TOLERANCES EXCEPT WHERE NOTED: .X = ± .1, .XX = ± .05, .XXX = ± .010, ANGLES = ± 1° THREADS: INTERNAL=CLASS 2B EXTERNAL=CLASS 2A	DRAWN BY	APRVD. BY	CHK'D BY	DATE	REV	ECO
	BNS	REB	LS	04/29/2010	B	
PROTO 1	DO NOT SCALE DRAWING				SHEET 2 OF 3	

© 2010 PARAVION TECH., INC. PARAVION IS A TRADEMARK OF PARAVION TECHNOLOGY, INC.